◆ ATELIER FORTVNY VENEZIA ◆

produced & distributed by Venetia Studium S.r.l. San Marco, 2425 . 30124 Venezia - Italy p+39 041 5236953 . info@fortuny.it

www.fortuny.it

FORTVNY SAMARKANDA

silk . ø 14 3/8 in. (cm 36,5)

art. 037 SK - 1

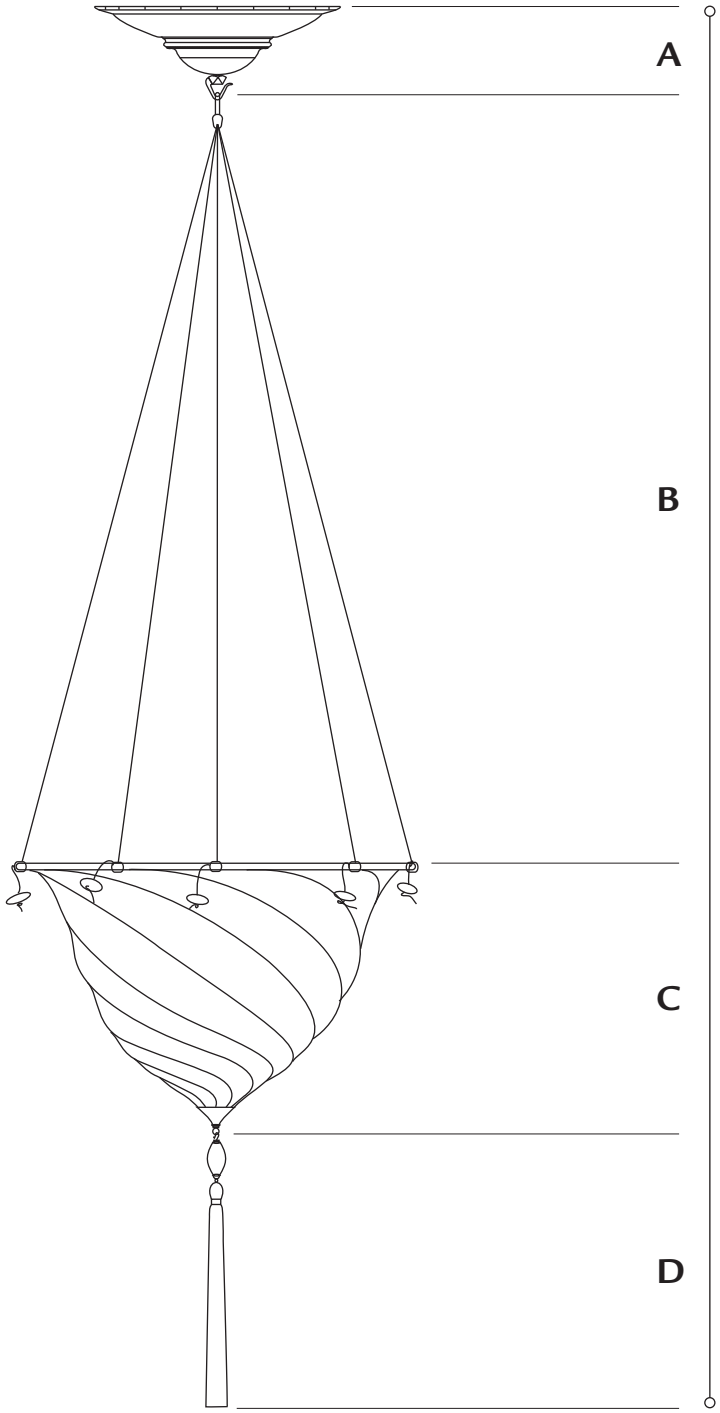

A. ceiling attachment ..... 4 in. (cm 10)
(hook included)

B. string's standard lenght ..... 28 in. (cm 71)
minimum ..... 13 in. (cm 33)
maximum ..... 42 1/2 in. (cm 108)

C. shade ..... 9 1/2 in. (cm 24)
(metal tip included)

D. tassel ..... 9 7/8 in. (cm 25)

standard overall height ..... 51 1/8 in. (cm 130)
minimum ..... 36 1/4 in. (cm 92)
maximum ..... 65 3/4 in. (cm 167)

weight ..... lb.2 oz.3 (1 kg)

suggested wattage ..... 1 x max 60W

voltage 110/120V: E26 socket . 220/240V: E27 socket

◆ ATELIER FORTVNY VENEZIA ◆

produced & distributed by Venetia Studium S.r.l. San Marco, 2425 . 30124 Venezia - Italy p+39 041 5236953 . info@fortuny.it

www.fortuny.it

FORTVNY SAMARKANDA

silk . ø 14 3/8 in. (cm 36,5)

art. 037 SK - 2

A. ceiling attachment ..... 2 in. (cm 5)

B. shade ..... 9 1/2 in. (cm 24)
(metal tip included)

C. tassel ..... 9 7/8 in. (cm 25)

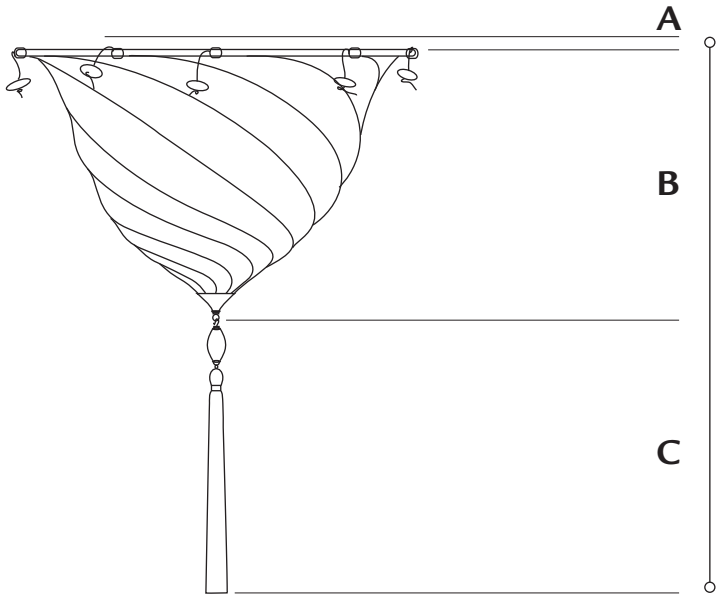

standard overall height ..... 21 1/4 in. (cm 54)

weight ..... lb.3 oz.5 (1,5 kg)

suggested wattage ..... 3 x max 25W

voltage 110/120V: E12 socket . 220/240V: E14 socket